# Accessories

## W20 In-Ground Bench Wheel Set

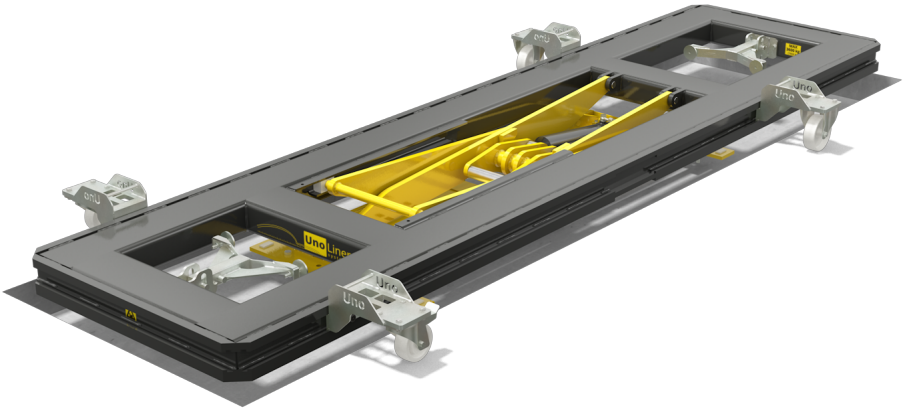

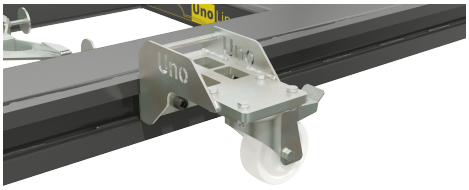

The UnoLiner W20 In-Ground Bench Wheel Set consists of two swivel casters with brakes and two rigid casters. When combined with the *W60 Manual Lift*, this set adds mobility to a UnoLiner *In-Ground* chassis straightening bench, allowing it to be freely moved around in the repair workshop or relocated entirely.

### Features

- For moving In-Ground benches
- Two rigid casters
- Two swivel casters with brakes
- Quick Lock single-bolt locking system

### Technical data
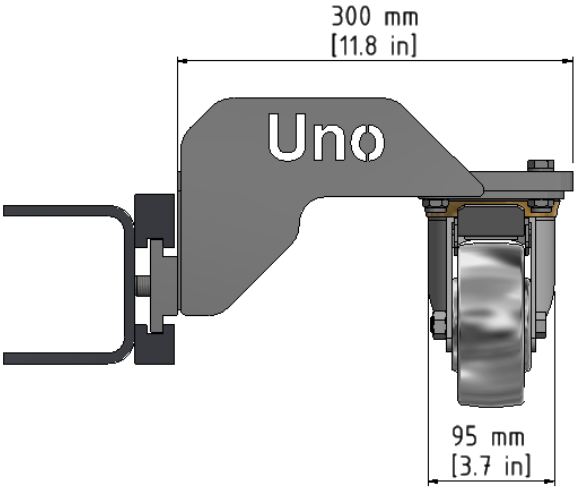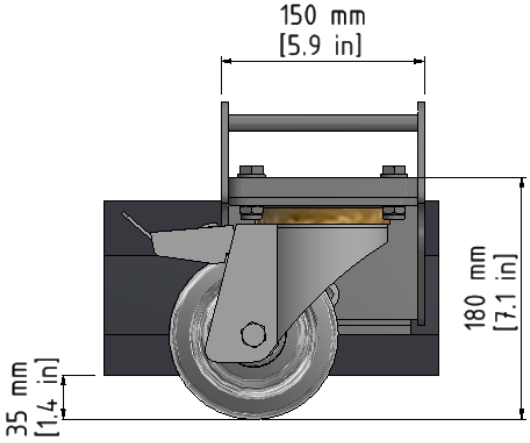
| | | |
|---|---|---|
| Caster diameter | Ø150 | mm |